DWG.NO. HW1385410

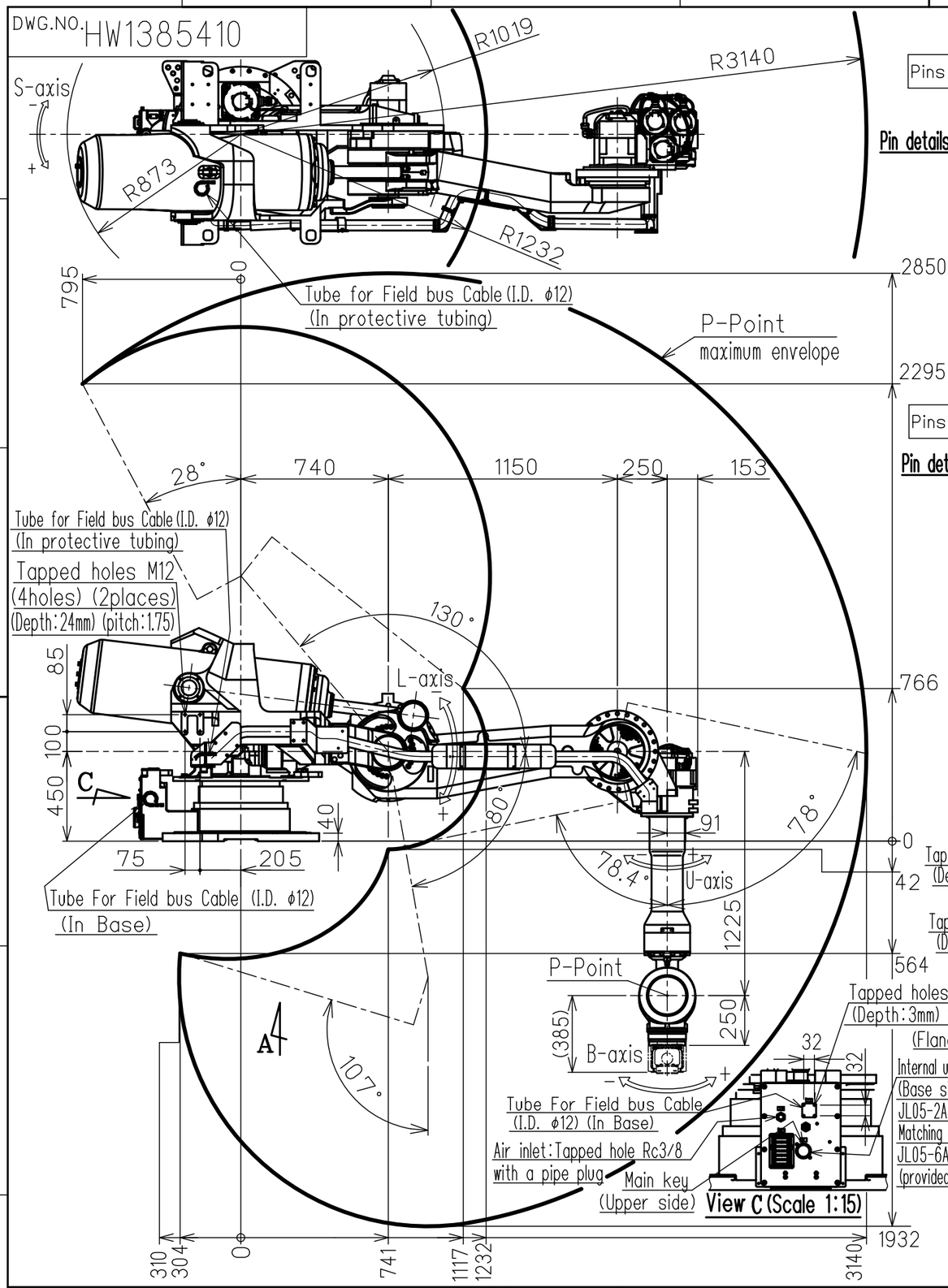

View C (Scale 1:15)

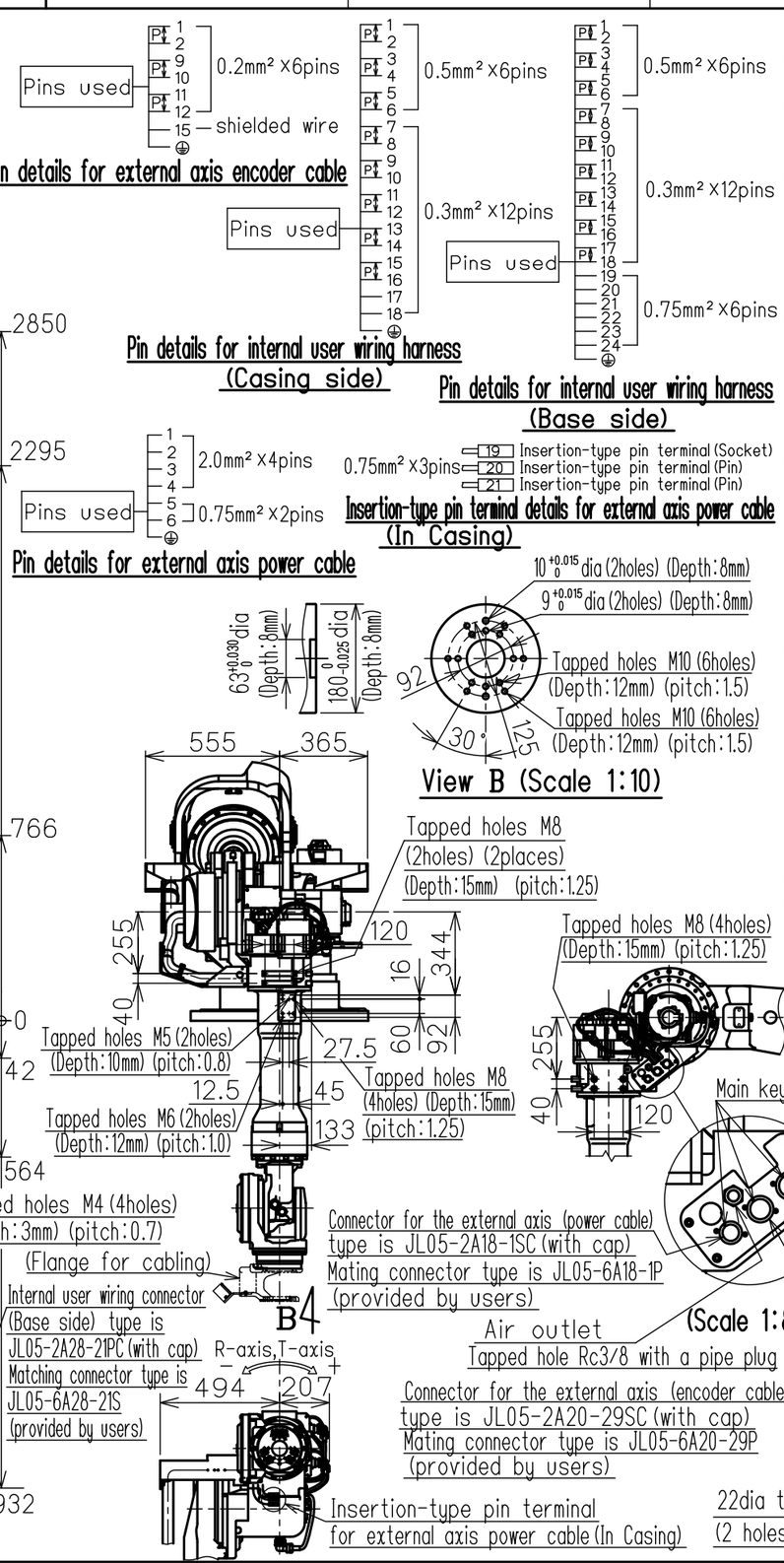

View B (Scale 1:10)

View A

Item \ Model		MOTOMAN-SP185R	
Flange for Cabling		not-equipped	equipped
Configuration		Vertically articulated	
Degree of Freedom		6	
Payload	Wrist	200kg	186.5kg
	On U-arm	30kg	
Repeatability (※1)		±0.2 mm	
Range of Motion	S-Axis(Turning)	-180° - +180°	
	L-Axis(Lower Arm)	-130° - +80°	
	U-Axis(Upper Arm)	-78.4° - +78°	
	R-Axis(Roll)	-360° - +360°	-205° - +205°
	B-Axis(Pitch/Yaw)	-125° - +125°	-120° - +120°
	T-Axis(Twist)	-360° - +360°	-180° - +180°
Max Speed	S-Axis	1.57rad/s,90°/s	
	L-Axis	1.48rad/s,85°/s	
	U-Axis	1.48rad/s,85°/s	
	R-Axis	2.09rad/s,120°/s	
	B-Axis	2.09rad/s,120°/s	
	T-Axis	3.32rad/s,190°/s	
Allowable Moment	R-Axis	1344 N·m (137kgf·m)	1291 N·m (132kgf·m)
	B-Axis	1344 N·m (137kgf·m)	1291 N·m (132kgf·m)
	T-Axis	715 N·m (73kgf·m)	
Allowable Inertia (GD²/4)	R-Axis	143 kg·m²	141 kg·m²
	B-Axis	143 kg·m²	141 kg·m²
	T-Axis	80 kg·m²	
Approx.Robot mass		1830kg	
Protected structure		Body:IP54 Wrist:IP67	
Mounting method		Shelf-mounted	
Ambient Conditions	Temperature	0 to +45℃	
	Humidity	20 to 80%RH (Non-condensing)	
	Vibration	4.9m/s² (0.5G) or less	
	Altitude	1000m or less	
	Others	·Free from explosive or corrosive gas and liquid. ·Free from dust,soot,oil,or water. ·Free from electrical noise. ·Free from strong magnetic fields.	
Power Requirements		5.0KVA	
Controller		YRC1000	

※1 Repeatabilitiy is conformed to ISO 9283.
※2 The manipulator is in the home position.

Units:mm

Type	Note
YR-1-06VR200-A00	STANDARD

Note:
1.All rights reserved.
2.Please note that the data is subject to be deleted without advance notice.
3.No warranty is given in relation to the data including the specification.
4.We are not responsible for any damages or loss caused by the use of the data.

FOR STUDY PURPOSE ONLY

SCALE 1 :25

YASKAWA
株式会社 安川電機

Reference Drawing

TITLE MOTOMAN-SP185R
DIMENSION DIAGRAM

DRWN DATE Oct.03.'17

DWG.NO. HW1385410 ①

SIZE A3